Cord Reel

Cord Reel

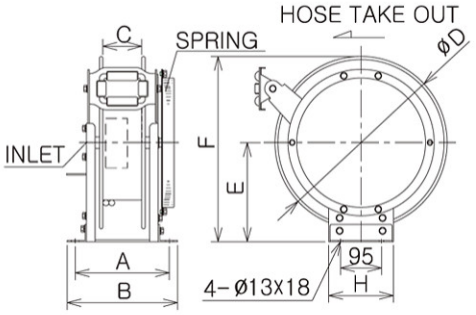

ALE-SK Type

- Use : Operation cable for industrial site, For power supply
- Features : Solid frame, High durable slip ring, Manual rewind
- Installation : Wall, Floor (Within 4M height, If installed over 4M, it could not rewind.)

Model	Cable		Maximum Capacity Max (V×A)	External Size							Weight (kg)	Remark
	Cable Specifications	L (M)		A	B	C	D	E	F	G		
ALE-415-3	VCTF-4.0 SQ×3C	15	380V×15A	238	278	110	400	230	430	150	25.6	For Indoor
ALE-420-3	VCTF-4.0 SQ×3C	20	380V×15A	238	278	110	400	230	430	150	28.6	For Indoor
ALE-425-3	VCTF-4.0 SQ×3C	25	380V×15A	238	278	110	450	260	485	150	32	For Indoor
ALE-430-3	VCTF-4.0 SQ×3C	30	380V×15A	238	278	110	450	260	485	150	36	For Indoor
ALE-615-3	VCTF-6.0 SQ×3C	15	380V×30A	238	278	110	400	230	430	150	27	For Indoor
ALE-620-3	VCTF-6.0 SQ×3C	20	380V×30A	238	278	110	450	260	485	150	30	For Indoor
ALE-625-3	VCTF-6.0 SQ×3C	25	380V×30A	238	278	110	500	290	540	200	33.5	For Indoor
ALE-630-3	VCTF-6.0 SQ×3C	30	380V×30A	278	318	150	500	290	540	200	37	For Indoor
ALE-1015-3	VCTF-10 SQ×3C	15	380V×40A	278	318	150	400	230	430	150	32	For Indoor
ALE-1020-3	VCTF-10 SQ×3C	20	380V×40A	278	318	150	450	260	485	150	37	For Indoor
ALE-1025-3	VCTF-10 SQ×3C	25	380V×40A	278	318	150	500	290	540	200	42	For Indoor
ALE-1030-3	VCTF-10 SQ×3C	30	380V×40A	278	318	150	500	290	540	200	46	For Indoor

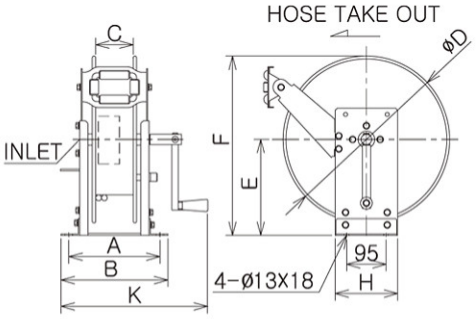

ALM-SK Type

Manual Rewind

- Use : Operation cable for industrial site, For power supply
- Features : Solid frame, High durable slip ring, Manual rewind
- Installation : Wall, Floor (Within 4M height, If installed over 4M, it could not rewind.)

Model	Cable		Maximum Capacity Max (V×A)	External Size								Weight (kg)	Remark
	Cable Specifications	L (M)		A	B	C	D	E	F	H	K		
ALM-420-3	VCTF-4.0 SQ×3C	20	380V×15A	238	278	110	400	230	430	150	380	16.6	For Indoor
ALM-430-3	VCTF-4.0 SQ×3C	30	380V×15A	238	278	110	450	260	485	150	380	21.5	For Indoor
ALM-440-3	VCTF-4.0 SQ×3C	40	380V×15A	238	278	110	450	260	485	200	380	24.5	For Indoor
ALM-450-3	VCTF-4.0 SQ×3C	50	380V×15A	278	318	150	450	260	485	200	420	29.5	For Indoor
ALM-620-3	VCTF-6.0 SQ×3C	20	380V×30A	238	278	110	450	260	485	150	380	21	For Indoor
ALM-630-3	VCTF-6.0 SQ×3C	30	380V×30A	278	318	150	500	290	540	200	420	23	For Indoor
ALM-640-3	VCTF-6.0 SQ×3C	40	380V×30A	278	318	150	450	260	485	200	420	27.5	For Indoor
ALM-650-3	VCTF-6.0 SQ×3C	50	380V×30A	278	318	150	500	290	540	200	420	32.4	For Indoor
ALM-1020-3	VCTF-10 SQ×3C	20	380V×40A	278	318	150	450	260	485	150	420	27	For Indoor
ALM-1030-3	VCTF-10 SQ×3C	30	380V×40A	278	318	150	500	290	540	200	420	32	For Indoor
ALM-1040-3	VCTF-10 SQ×3C	40	380V×40A	338	378	210	450	260	485	200	480	36	For Indoor
ALM-1050-3	VCTF-10 SQ×3C	50	380V×40A	338	378	210	450	260	485	200	480	40	For Indoor

CRANE & HOIST
DAI VIET CRANE., JSC
Website: